FOR-1754 Rev.1.1

Pitch Range In mm			Nominal Dimension Range In mm					— ⌒ ▱
TO 6	Over 6 TO 10	Over 10 TO 24	TO 30	Over 30 TO 60	Over 60 TO 100	Over 100 TO 150	Over 150	0.1/10
								∠
±0.15	±0.20	±0.30	±0.30	±0.50	±0.70	±1.00	±1.30	±2°

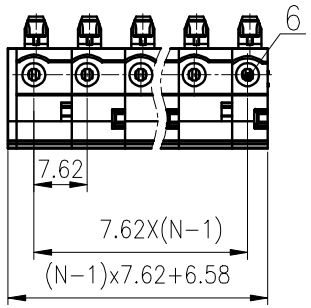

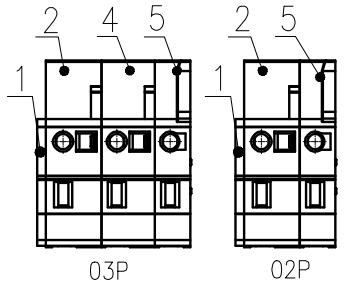

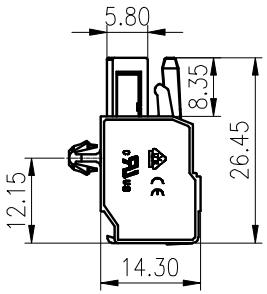

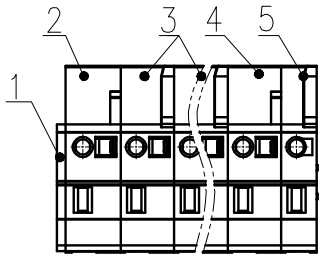

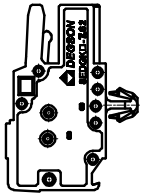

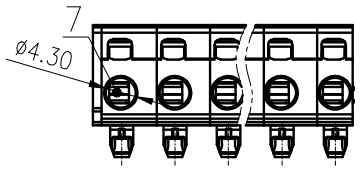

ITEM	NAME OF PART	MATERIAL	NOTES
7	Clamp	Copper alloy	Sn plated
6	Spring	Stainless steel	
5	Side housing 2	PA66	UL94V-0
4	Middle housing 2	PA66	UL94V-0
3	Middle housing 1	PA66	UL94V-0
2	Side housing 1	PA66	UL94V-0
1	Cover	PA66	UL94V-0

UL 标准/UL Standard:	B	C	D
额定电压/电流/Rated Voltage(V)/Current(A)	300/15	300/15	300/10
IEC 标准/IEC Standard:			
过压类别/Overvoltage Category/污染等级/Pollution Degree	Ⅲ/3	Ⅲ/2	Ⅱ/2
额定电压/电流/Rated Voltage(V)/Current(A)	400/20	/	/
额定脉冲电压(KV)/Rate Impulse Voltage(KV)	4	/	/
线径范围(硬线和软线)/Wire Range(rigid and flexible)(mm^2/AWG)	0.2~2.5/22~14		
间距/Pitch(mm)/线数范围/Poles	7.62/N=02~12P		
剥线长度/Stripping length(mm)	9-10		
使用温度范围/Operating temperature(°C)	-40~+105		
符合RoHS环保要求/Conform to RoHS	Yes		
标准颜色编号/Standard color number: PANTONE	428C		

REV	ECN	DESCRIPTION	DRFT	DATE

MATERIAL: / SURFACE: /

MAT NO.: /

STATUS: /

APPD:

CHKD:

DRFT: CZ 2018.03.09

DEGSON®

宁波高松电子有限公司
NINGBO DEGSON ELECTRICAL CO., LTD

NAME: 8EDGKC-7.62-XXP-11-1001A(H)

DRAWING NO.: 8EDGKC-7.62-C02 REV T0

SIZE: A4 mm (inch) TYPE: CUSTOMER DRAWING SCALE: 1:1 SHEET 1/1